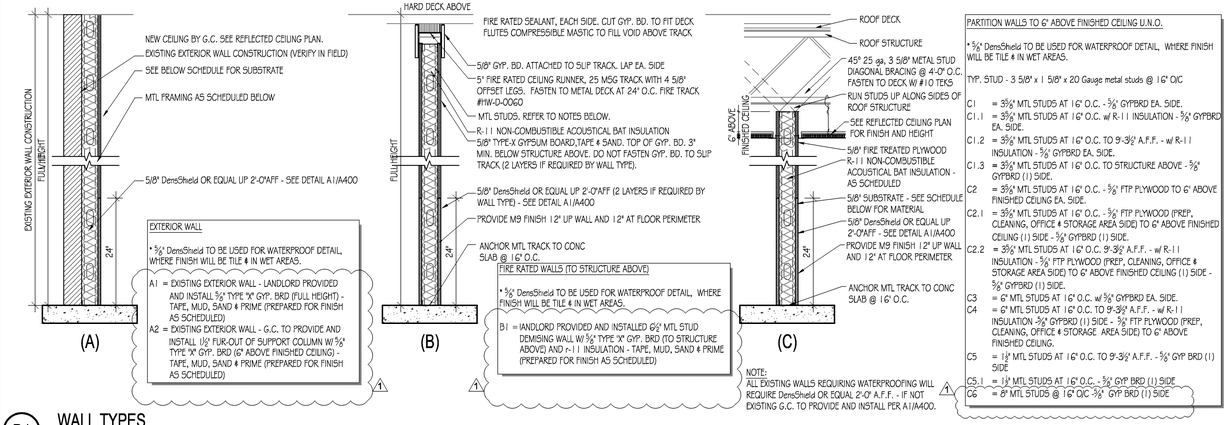

D1 WALL TYPES

Scale: N.T.S.

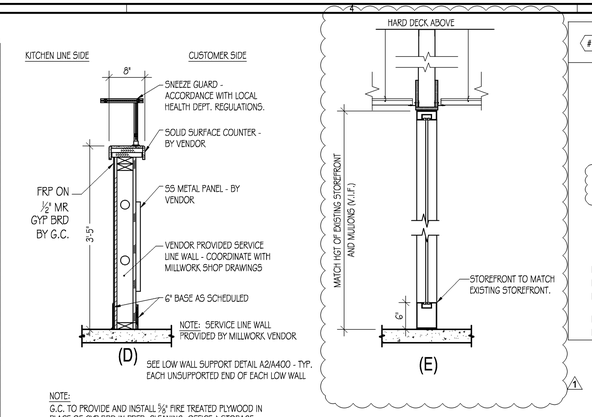

CODED NOTES

1. (2) 1"Ø CONDUIT LINES FOR P.O.S. SYSTEM AND TELEPHONES. RUN LINE THRU COUNTER WALL UP TO CEILING AND TERMINATE AT OFFICE AS REQUIRED. (INSTALLED BY ELECTRICAL CONTRACTOR). LINES BEGIN AT P.O.S. STATION CABINET AND TERMINATE AT OFFICE
2. TERMINATE (2) 1" Ø P.O.S. COMMUNICATIONS CONDUITS IN WALL AT OFFICE. INSTALL IN CEILING AND DOWN WALL AS SHOWN TO P.O.S. COORDINATE LOCATIONS W/QDOBA CM
3. INSTALL NEW FIRE EXTINGUISHER (O.F.C.I.) (TYPE K) WALL MOUNT EXTINGUISHER - T.O. 60"A.F.F. MAX. / B.O. 4"MIN. A.F.F. - PROTRUSION INTO PATH OF CIRCULATION 4"MAX
4. INSTALL NEW FIRE EXTINGUISHER (O.F.C.I.) (MIN. - TYPE 2A 40BC.) WALL MOUNT EXTINGUISHER - T.O. 60"A.F.F. MAX. / B.O. 4"MIN. A.F.F. - PROTRUSION INTO PATH OF CIRCULATION 4"MAX
5. CONTRACTOR SHALL FURNISH AND INSTALL (1) OVERHEAD (ABOVE CEILING) PIPE CHASE (6" O.D.) FOR SODA LINES. PIPE CHASE SHALL STUB OUT 6" A.F.F. AT BOTH ENDS. PIPE CHASE SHALL BEGIN AT THE BAG-IN-BOX LOCATION AND TERMINATE BELOW DRINK STATION MILLWORK. SEE K-SHEETS FOR SPECIFIC LOCATIONS
6. ~~G.C. TO PROVIDE WATERPROOFING - SEE DETAIL A1/A400~~
7. RELOCATED ELECTRIC PANEL - SEE ELECTRICAL DRAWINGS
8. DUMB WAITER-SUPPLIED & INSTALLED BY VENDOR - COORDINATE INSTALLATION AND FINNISH REQUIREMENTS WITH SHOP DRAWINGS
9. REMOTE CO2 FILL - SUPPLIED BY VENDOR AND INSTALLED BY GC
10. G.C. TO COORDINATE HALF WALL WITH MILLWORK PROVIDED BEVERAGE SCREEN
11. LINE OF STORAGE AREA ABOVE
12. CONTRACTOR TO INFILL EXISTING 3" DEPRESSION WITH CONCRETE TO MATCH EXISTING - FINISH TO EXCEPT FINISH AS SCHEDULED
13. IN-SET VESTIBULE MAT - SEE FINISH SCHEDULE - COORDINATE WITH QDOBA CM FOR INSTALLATION REQUIREMENTS
14. STORAGE LADDER - SEE SECTION - CONTRACTOR SUPPLIED AND INSTALLED

NOTES:
1. USE MOISTURE RESISTANT GYPSUM BOARD AT WET WALLS & BEHIND PLUMBING FIXTURES.
2. PROVIDE BAT INSULATION IN WALLS WHERE SCHEDULED ON WALL TYPES.

XXX DOOR TAG - SEE SHEET A400

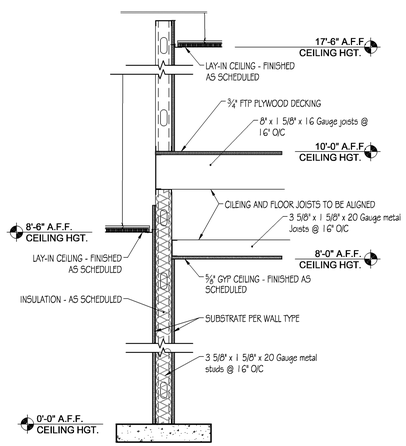

B1 WALL SECTION AT STORAGE AREA

Scale: N.T.S.

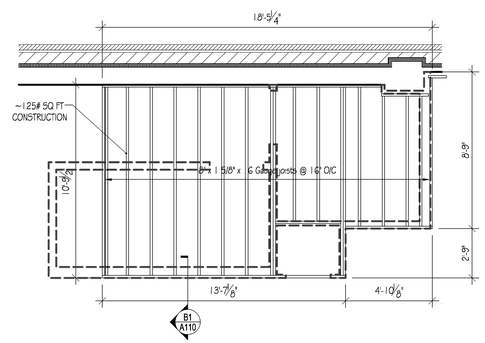

B2 STORAGE AREA FLOOR FRAMING PLAN

Scale: 1/4"=1'-0"

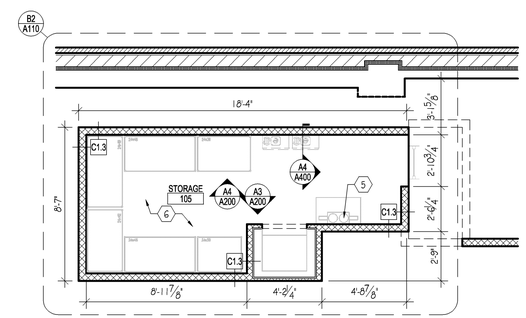

STORAGE AREA CONSTRUCTION PLAN

Scale: 1/4"=1'-0"

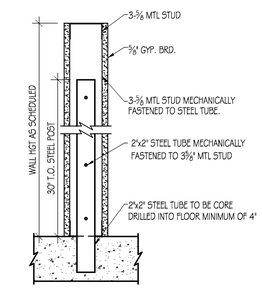

B5 TYP. LOW WALL SUPPORT DETAIL

Scale: N.T.S.

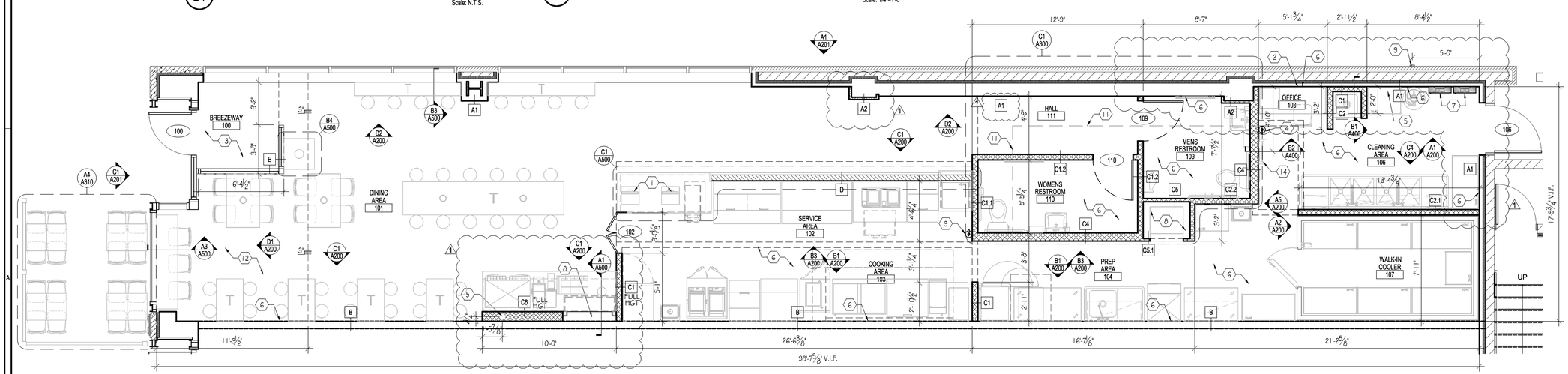

CONSTRUCTION PLAN

Scale: 1/4"=1'-0"

LINGLE DESIGN GROUP, INC
WEST MAIN STREET
LENA, IL 61048 158
PHONE: 815-369-9155
FAX: 815-369-4495
WWW.LINGLEDESIGN.COM

© ALL DRAWINGS AND WRITTEN MATERIAL CONTAINED HEREIN ARE THE PROPERTY OF THE ARCHITECT. THEY MAY NOT BE REVISED, COPIED, REUSED, OR DISCLOSED IN ANY MANNER WITHOUT WRITTEN AUTHORIZATION FROM THE ARCHITECT.

Qdoba MEXICAN GRILL
20 E. Chicago Avenue
Chicago, IL 60611-2009

REVISIONS:

#	DATE:	DESCRIPTION:
1	1/8/10	ISSUED FOR CLIENT REVIEW
2	1/18/10	ISSUED FOR PERMIT

PROJECT NUMBER: 09-116
DRAWN BY: SRM
CHECKED BY: JTC

SHEET TITLE:
CONSTRUCTION PLAN

SHEET NUMBER:
A110